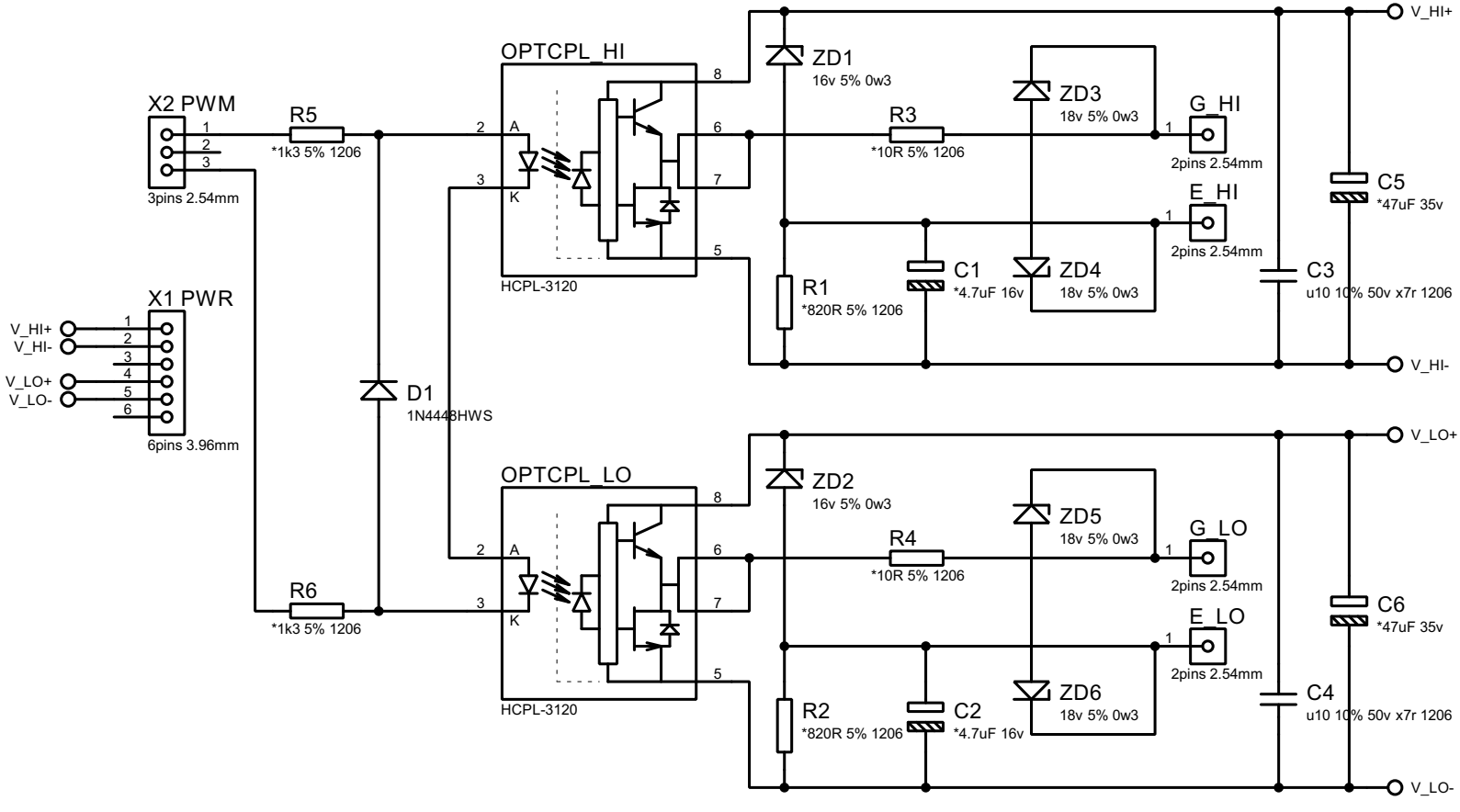
X2 PWM
3pins 2.54mm
R5
*1k3 5% 1206
R6
*1k3 5% 1206
X1 PWR
6pins 3.96mm
V_HI+
V_HI-
V_LO+
V_LO-
D1
1N4448HWS
OPTCPL_HI
HCPL-3120
OPTCPL_LO
HCPL-3120
ZD1
16v 5% 0w3
ZD2
16v 5% 0w3
R3
*10R 5% 1206
R4
*10R 5% 1206
ZD3
18v 5% 0w3
ZD4
18v 5% 0w3
ZD5
18v 5% 0w3
ZD6
18v 5% 0w3
R1
*820R 5% 1206
R2
*820R 5% 1206
C1
*4.7uF 16v
C2
*4.7uF 16v
G_HI
E_HI
G_LO
E_LO
2pins 2.54mm
C3
u10 10% 50v x7r 1206
C4
u10 10% 50v x7r 1206
C5
*47uF 35v
C6
*47uF 35v
V_HI+
V_HI-
V_LO+
V_LO-